LEGEND

PROPOSED UNDERGROUND FIBER OPTIC CABLE	
PROPOSED EMPIRE ACCESS HANDHOLE	
PROPOSED EMPIRE ACCESS FLOWER POT	
HANDHOLE	
RISER POLE	
TEST PIT	
BOLLARD	
PEDESTAL	
STORM CATCH BASIN	
MUNICIPAL MANHOLE	
TELEPHONE MANHOLE	
GAS VALVE	
WATER VALVE	
FIRE HYDRANT	
TRAFFIC LIGHT	
TRAFFIC CONTROL BOX	
TRANSFORMER	
STREET LIGHT	
STREET SIGN	
RAILROAD CROSSING	
CULVERT	
CENTERLINE	C/L
EASEMENT	
PROPERTY LINE	P/L
RIGHT-OF-WAY	R/W
DITCH LINE	D/L
SEWER	S
STORM	SD
STEAM	ST
ELECTRIC	E
WATER	W
GAS	G
AT&T	AT&T
LEVEL(3)	LTC
MCI	MCI
PECO	PECO
VERIZON	VZ
ZAYO	ZAYO

MAJOR MATERIALS

MATERIALS DESCRIPTION	QTY
FIBER OPTIC CABLE	2,526LF
2" HDPE CONDUIT	2,526LF
TRACER WIRE	2,526LF
13"x24" HANDHOLE	12 EA
FLOWER POT	6 EA

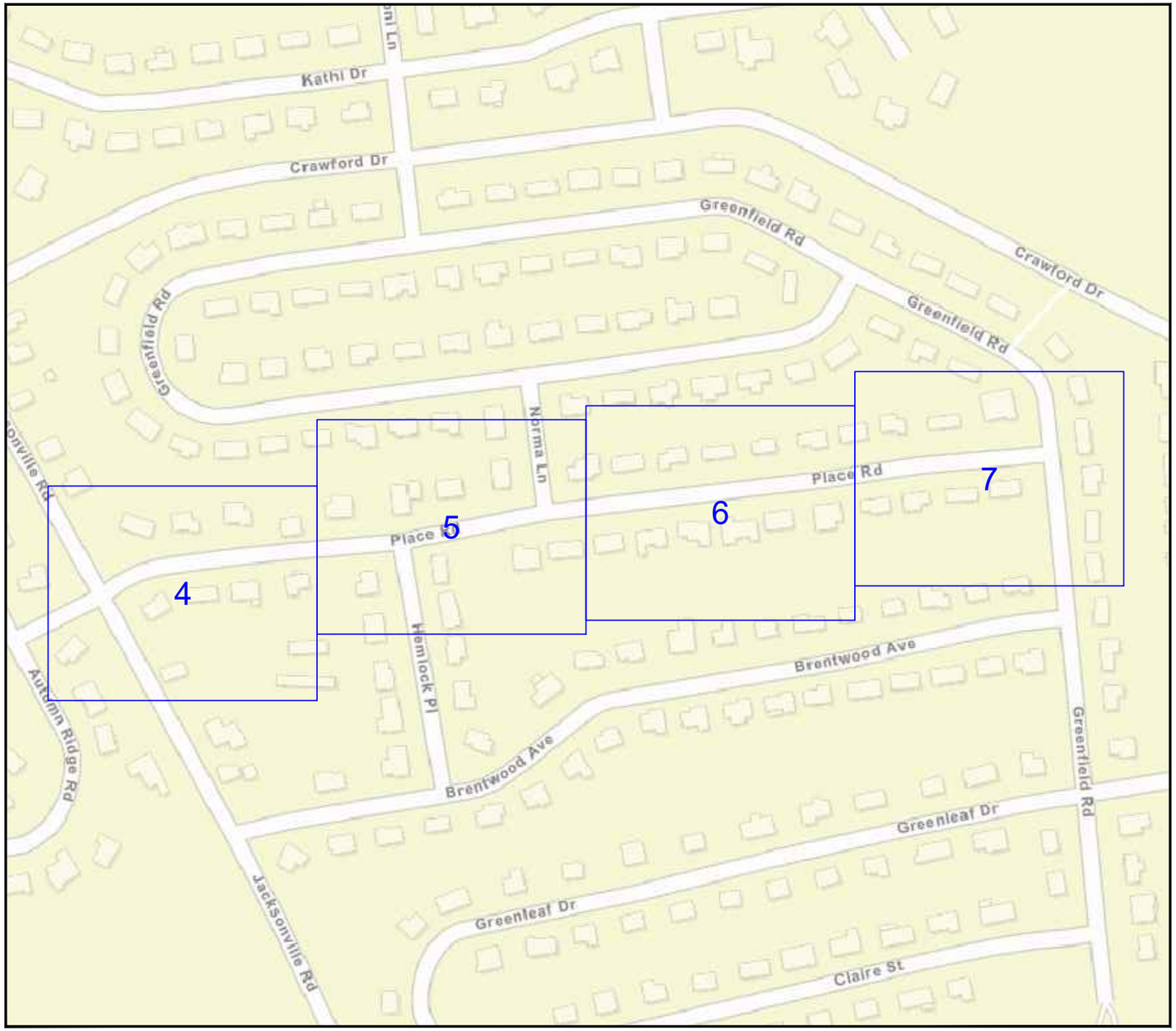

SITE LOCATION (EA0033)
PLACE RD, HANOVER TWP, PA

811
Know what's **below.**
Call before you dig.

CONTACTS

EMPIRE ACCESS: RICK WEISS 607-438-9843

EMPIRE ACCESS: PAUL RIZZO 610-737-4958

SPI COMMUNICATIONS: ENGINEER:
SHAWN PERRIN 610-420-3211
DAVE EDENFIELD 610-955-1758
JOSH HOWELLS 717-847-5617

INDEX

1 TITLE/LOCATION MAP/LEGEND/CONTACTS
2 GENERAL NOTES
3 TYPICAL DETAILS
4 - 7 OSP - PLAN VIEW

empire ACCESS

34 S MAIN ST
PRATTSBURGH, NY 14873

TITLE: PERMIT - HANOVER TOWNSHIP - NORTHAMPTON COUNTY
WORK ORDER: HRTP_251067 - 2025 HANOVER TOWNSHIP UNDERGROUND BUILD OSP

BY:

SPI COMMUNICATIONS

NO.	DATE	DESIGN	DRAFT	COMMENT
3				AS-BUILT
2	08/28/26	SP	MC	REVISION # 2
1	08/04/26	SP	LS	ORIGINAL

PROJECT NUMBER: EA0033
DRAWING NAME: EA_Place_Rd.dwg

CONFIDENTIAL/PROPRIETARY

GENERAL NOTES

1. The contractor shall verify existing right-of-way and property limits to the extent necessary to verify proposed work remains within these limits and does not infringe onto private property not owned by the owner.
2. The scale for drawings is for general information only. Dimensions shown and locations of utilities are not to be assumed or scaled.
3. The contractor shall obtain all permits and comply with the requirements of all agencies having jurisdiction over the work. Work will not be started prior to acquisition of all required permits.
4. Contractor shall coordinate all work with all public and private utilities as well as state agencies.
5. At least two(2) working days prior to the contractor's desired start date, the contractor shall contact the customer representative to arrange a field meeting and site visit to review the entire scope of work and specific locations and methods of all structure attachments.
6. The contractor shall notify the engineer when field conditions vary from the approved plans or the method of attachment cannot be accomplished as permitted.
7. Existing conditions, structures, utilities and surface features shown were obtained from utility atlases and from drawings furnished by the various utilities and are assumed to be accurate and correct. The contractor shall perform his own survey and verify all existing conditions, dimensions of existing structures and locations of existing utilities prior to starting any work.
8. The contractor shall perform test holes at all utility crossings to verify the location and elevation of all utilities prior to any excavation, and to locate any possible obstructions. Contractor to field verify locations of all overhead obstructions prior to commencement of work.
9. Existing utilities are shown at their approximate location. The contractor shall contact the Local Utility One-Call at 811 at least 72 hours in advance to request locating and marking of existing utilities prior to performing any excavation work in or around any utility.
10. The contractor shall record the location and elevation of all utilities encountered, and installation of new work, as the work progresses and shall prepare record drawings (red-lines) based on his records. These records to be supplied to Spi Communications at completion of work.
11. Contractor is responsible for obtaining and providing review and design of any and all temporary utility support systems prior to construction.
12. All work shall be performed according to the latest edition of any and all relating codes and standards, but not limited to the following: National Electric Safety Code, Occupational Safety & Health Administration, and Building Property Management.
13. All work to be performed in strict accordance with the applicable codes or requirements of an regulating governmental agency, or the right-of-way grantor.
14. The contractor is responsible to verify all existing utilities and their locations prior to the start of his work. Utilities shown on the plans are provided for information purposes only. The contractor shall provide a minimum of 72 hours notice to the utility owners having facilities near which he will be working. Any impacts to the existing utilities or traffic facilities are the sole responsibility of the contractor.
15. Protection and backfilling of all excavations, shall be in accordance with state, OSHA, and local regulations and requirements.
16. Conduit and manhole locations indicated have been established based on visual field observations. The contractor shall adjust the proposed conduit as required to avoid conflict with existing pipes, structures, etc. The proposed alignment is to be staked-out in the field and reviewed and approved by the engineer prior to commencing any work.
17. Maintenance and protection of traffic is the responsibility of the contractor and shall be furnished, installed, and maintained in accordance to the governing agency's traffic control details and applicable MUTCD requirements.
18. Existing right-of-way lines shown have been established from Municipal Tax Maps. The contractor is responsible to verify and work within the existing roadway right-of-way and utility easements.
19. Contractor is responsible for obtaining and providing review and design of any and all shoring systems prior to construction.
20. Engineer shall be notified for resolution of situations where duct package depth below grade cannot meet depth currently shown on plan/profile drawings.
21. Entry points into the building must be coordinated with the owner's representative prior to performing the work. All core drilling shall be performed during approved hours as designated by the owner's representative or building management.
22. All penetrations through non-fire rated construction shall be sealed and patched to match existing and to provide a watertight seal. All penetrations through fire rated construction shall be sealed with approved fire-stop materials.
23. Contractor shall take all necessary safety precautions to protect utilities, pedestrians, workers, and vehicular traffic. The contractor shall provide temporary protections (fences, barricades, etc.) as required by local governing agencies and applicable safety guidelines to protect adjacent property and the public during all phases of construction.
24. The contractor shall provide all temporary barricades, signage, warning lights and other devices and maintain these operational 24 hours a day at all open trench locations and at locations which do not have a finished surface.
25. Contractor must obtain locates prior to disturbing the ground.
26. Contractor must have a copy of the approved permit from the appropriate agency on the jobsite at all times.
27. Any landscaping will be replaced to equal or better than that which existed prior to work.
28. Project site will be properly secured to prior to the end of each day.
29. All work is to be in accordance with all authorities having jurisdiction in the work zone.
30. Contractors are advised to contact customer for any additional information or clarification concerning scope of work or the requirements necessary for project completion.
31. Contractor is responsible to field verify all dimensions, quantities and existing conditions prior to construction. If a significant change to the running line is needed, please contact your customer representative before proceeding.
32. Before construction begins, contractor shall take appropriate precautions to avoid any potential obstructions prior to proceeding with work.
33. No construction on private property will commence until approval is given by the appropriate customer representative.
34. Contractor shall not proceed with work until they have received a Purchase Order and have been directed to do so by and authorized customer representative.
35. Contractor shall not exceed the Purchase Order value without authorization in writing from the appropriate customer representative.
36. Fiber optic warning tape will be placed 12" below the existing grade in all excavations.
37. A 12" separation between proposed conduit and other utilities will be maintained (Unless in PENNDOT R/W, then 18" separation is to be maintained).
38. Conduit caps will be placed on the ends of all vacant ducts during construction, upon completion, and while awaiting fiber installation.
39. All install ducts will be proofed using a mandrill 1/4" smaller than the pipe id pvc as shown on drawing.
40. The minimum bending radius for fiber cable will be 36".
41. Maximum cable installation tension will not exceed 600 pounds. A 600 pound breakaway swivel will be used during pulling.
42. The removal and storage of all shrubbery to be replaced is the responsibility of the contractor.
43. The contractor will restore all disturbed areas to their original or better condition.
44. Contractor shall restore sidewalk, driveway, curb, gutters, and landscaping elements to permanent conditions. Contractor to conform concrete to color, finish, and texture of existing sidewalks, curb and gutter.
45. Streets affected by excavation shall be restored per local governing agency's specifications for "regulations for openings, construction and repair in the roadway". Replacement to be determined by contractor, private property owner and local governing agency based on actual excavation.
46. Restoration of the area around the conduit run includes: concrete, sod, black dirt, backfill, shrubs, trees, street concrete base, asphalt primer, hot rolled asphalt, sidewalk, driveway, curb and gutter, handicapped ramps, and reinstallation of all signs, mailboxes, traffic signals, traffic signal box, meters, light standard, benches, planters, and canopies. Contractor to pay all fees and obtain all permits for restoration.
47. The contractor is to restore all damaged structures and utilities to the satisfaction of the owner's representative.
48. Backfill shall be deposited in layers not to exceed six(6) inches in uncompacted thickness. Backfill shall be mechanically compacted to at least ninety-five(95) percent of the maximum dry density. Backfill material shall be composed of clean fill only and shall not contain wood, grass, roots, broken concrete, stones, rubbish, frozen lumps or corrosive materials. The backfill shall not be placed in water or water jetted to achieve compaction (Unless in PENNDOT R/W, then compaction is to be performed in accordance with Pub 408 Section 206).
49. As-Builts will be required for each project including cable footage sequentials at every access point, slack loop, splice location, pole and termination point. Contractor should also provide notes of all changes in depths, running lines, mh/hh locations, and any other applicable notes to depict the work that took place. NOTE: All major changes need to be pre-approved by an authorized employee prior to starting the work. It is the responsibility of the contractor to maintain construction As-Built drawings and present a complete set of red-lined drawings to customer within 14 days of completion of the work.
50. All coring/construction that will cause noise and/or vibration shall be done outside normal business hours or to the discretion of the Building Management.

811 Know what's below. Call before you dig.

empire ACCESS

TITLE: PERMIT - HANOVER TOWNSHIP - NORTHAMPTON COUNTY
WORK ORDER: HRTP_251067 - 2025 HANOVER TOWNSHIP UNDERGROUND BUILD OSP

BY: SPI COMMUNICATIONS

NO.	DATE	DESIGN	DRAFT	COMMENT
3				AS-BUILT
2	08/28/26	SP	MC	REVISION # 2
1	08/04/26	SP	LS	ORIGINAL

PROJECT NUMBER: EA0033
DRAWING NAME: EA_Place_Rd.dwg

CONFIDENTIAL/PROPRIETARY

TYPICALS

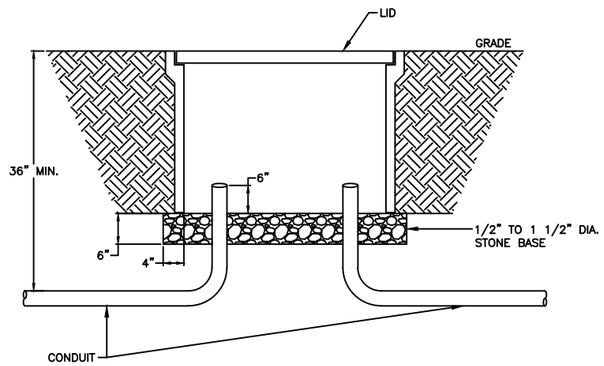

TYPICAL 13"x24" HANDHOLE DETAIL

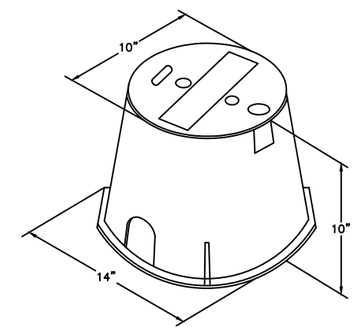

TYPICAL FLOWER POT DETAIL

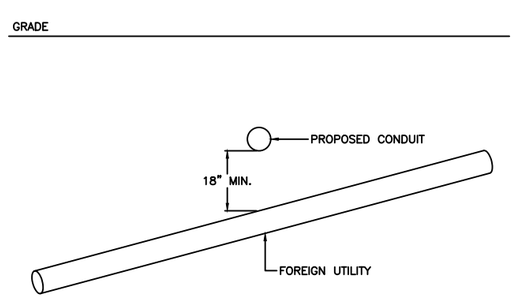

FOREIGN UTILITY DETAIL

NOTE:

MAINTAIN A MINIMUM OF 18" CLEARANCE FROM ALL FOREIGN UTILITIES

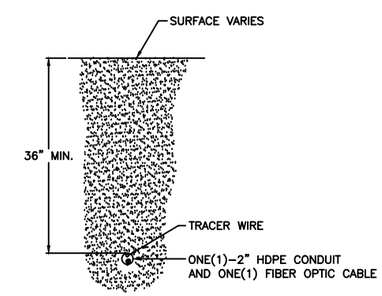

TYPICAL DIRECTIONAL BORE DETAIL

811 Know what's below. Call before you dig.

empire ACCESS

TITLE: PERMIT - HANOVER TOWNSHIP - NORTHAMPTON COUNTY
WORK ORDER: HRTP_251067 - 2025 HANOVER TOWNSHIP UNDERGROUND BUILD OSP

BY: SPI COMMUNICATIONS

NO.	DATE	DESIGN	DRAFT	COMMENT
3				AS-BUILT
2	08/28/26	SP	MC	REVISION # 2
1	08/04/26	SP	LS	ORIGINAL

PROJECT NUMBER: EA0033
DRAWING NAME: EA_Place_Rd.dwg

CONFIDENTIAL/PROPRIETARY

OSP - PLAN VIEW

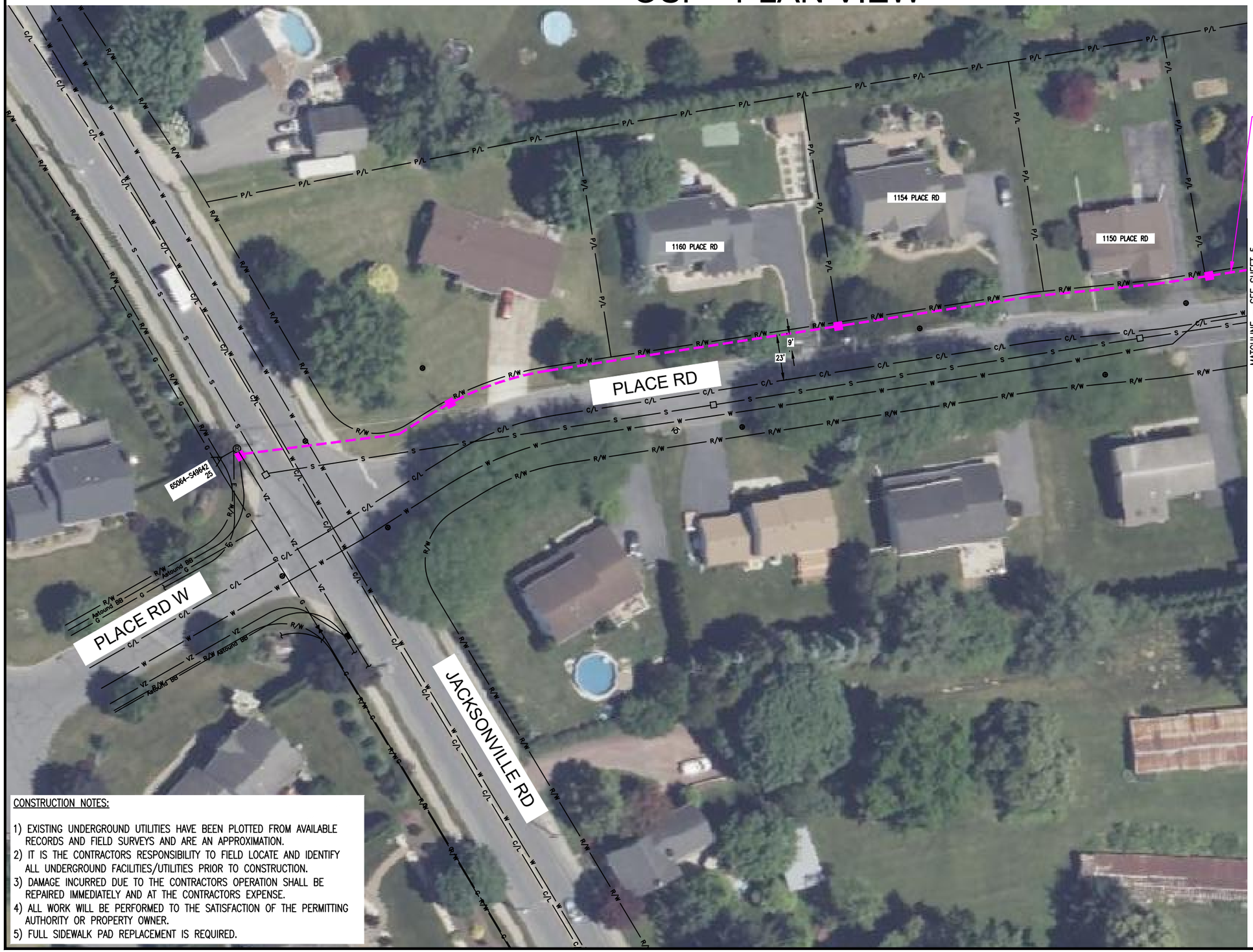

CONSTRUCTION NOTES:

1) EXISTING UNDERGROUND UTILITIES HAVE BEEN PLOTTED FROM AVAILABLE RECORDS AND FIELD SURVEYS AND ARE AN APPROXIMATION.
2) IT IS THE CONTRACTORS RESPONSIBILITY TO FIELD LOCATE AND IDENTIFY ALL UNDERGROUND FACILITIES/UTILITIES PRIOR TO CONSTRUCTION.
3) DAMAGE INCURRED DUE TO THE CONTRACTORS OPERATION SHALL BE REPAIRED IMMEDIATELY AND AT THE CONTRACTORS EXPENSE.
4) ALL WORK WILL BE PERFORMED TO THE SATISFACTION OF THE PERMITTING AUTHORITY OR PROPERTY OWNER.
5) FULL SIDEWALK PAD REPLACEMENT IS REQUIRED.

811 Know what's below. Call before you dig.

0 10' 20' 30' 40' 50'
SCALE: 1"=50'

empire ACCESS

TITLE: PERMIT - HANOVER TOWNSHIP - NORTHAMPTON COUNTY
WORK ORDER: HRTP_251067 - 2025 HANOVER TOWNSHIP UNDERGROUND BUILD OSP

BY: SPI COMMUNICATIONS

NO.	DATE	DESIGN	DRAFT	COMMENT
3				AS-BUILT
2	08/28/26	SP	MC	REVISION # 2
1	08/04/26	SP	LS	ORIGINAL

PROJECT NUMBER: EA0033
DRAWING NAME: EA_Place_Rd.dwg

CONFIDENTIAL/PROPRIETARY

SHEET: 4 OF 7

CONSTRUCTION NOTES:

1) EXISTING UNDERGROUND UTILITIES HAVE BEEN PLOTTED FROM AVAILABLE RECORDS AND FIELD SURVEYS AND ARE AN APPROXIMATION.
2) IT IS THE CONTRACTORS RESPONSIBILITY TO FIELD LOCATE AND IDENTIFY ALL UNDERGROUND FACILITIES/UTILITIES PRIOR TO CONSTRUCTION.
3) DAMAGE INCURRED DUE TO THE CONTRACTORS OPERATION SHALL BE REPAIRED IMMEDIATELY AND AT THE CONTRACTORS EXPENSE.
4) ALL WORK WILL BE PERFORMED TO THE SATISFACTION OF THE PERMITTING AUTHORITY OR PROPERTY OWNER.
5) FULL SIDEWALK PAD REPLACEMENT IS REQUIRED.

OSP - PLAN VIEW

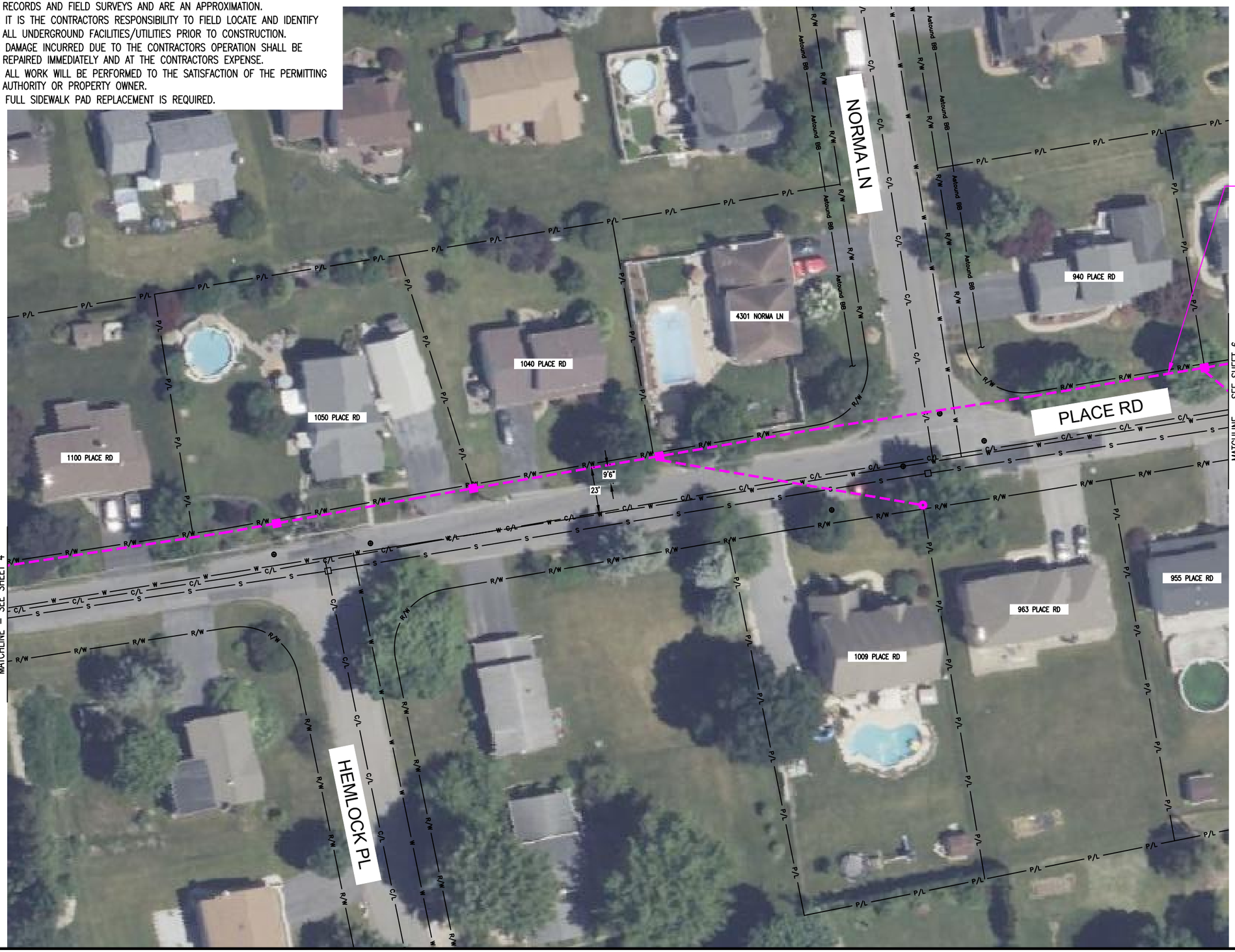

785LF DIRECTIONAL BORE
PLACE ONE(1)-2" HDPE CONDUIT AND ONE(1) EMPIRE ACCESS FIBER OPTIC CABLE WITH TRACER WIRE

811 Know what's below. Call before you dig.

0 10' 20' 30' 40' 50'
SCALE: 1"=50'

empire ACCESS

TITLE: PERMIT - HANOVER TOWNSHIP - NORTHAMPTON COUNTY
WORK ORDER: HRTP_251067 - 2025 HANOVER TOWNSHIP UNDERGROUND BUILD OSP

BY: SPI COMMUNICATIONS

NO.	DATE	DESIGN	DRAFT	COMMENT
3				AS-BUILT
2	08/28/26	SP	MC	REVISION # 2
1	08/04/26	SP	LS	ORIGINAL

PROJECT NUMBER: EA0033
DRAWING NAME: EA_Place_Rd.dwg

CONFIDENTIAL/PROPRIETARY

CONSTRUCTION NOTES:

1) EXISTING UNDERGROUND UTILITIES HAVE BEEN PLOTTED FROM AVAILABLE RECORDS AND FIELD SURVEYS AND ARE AN APPROXIMATION.
2) IT IS THE CONTRACTORS RESPONSIBILITY TO FIELD LOCATE AND IDENTIFY ALL UNDERGROUND FACILITIES/UTILITIES PRIOR TO CONSTRUCTION.
3) DAMAGE INCURRED DUE TO THE CONTRACTORS OPERATION SHALL BE REPAIRED IMMEDIATELY AND AT THE CONTRACTORS EXPENSE.
4) ALL WORK WILL BE PERFORMED TO THE SATISFACTION OF THE PERMITTING AUTHORITY OR PROPERTY OWNER.
5) FULL SIDEWALK PAD REPLACEMENT IS REQUIRED.

OSP - PLAN VIEW

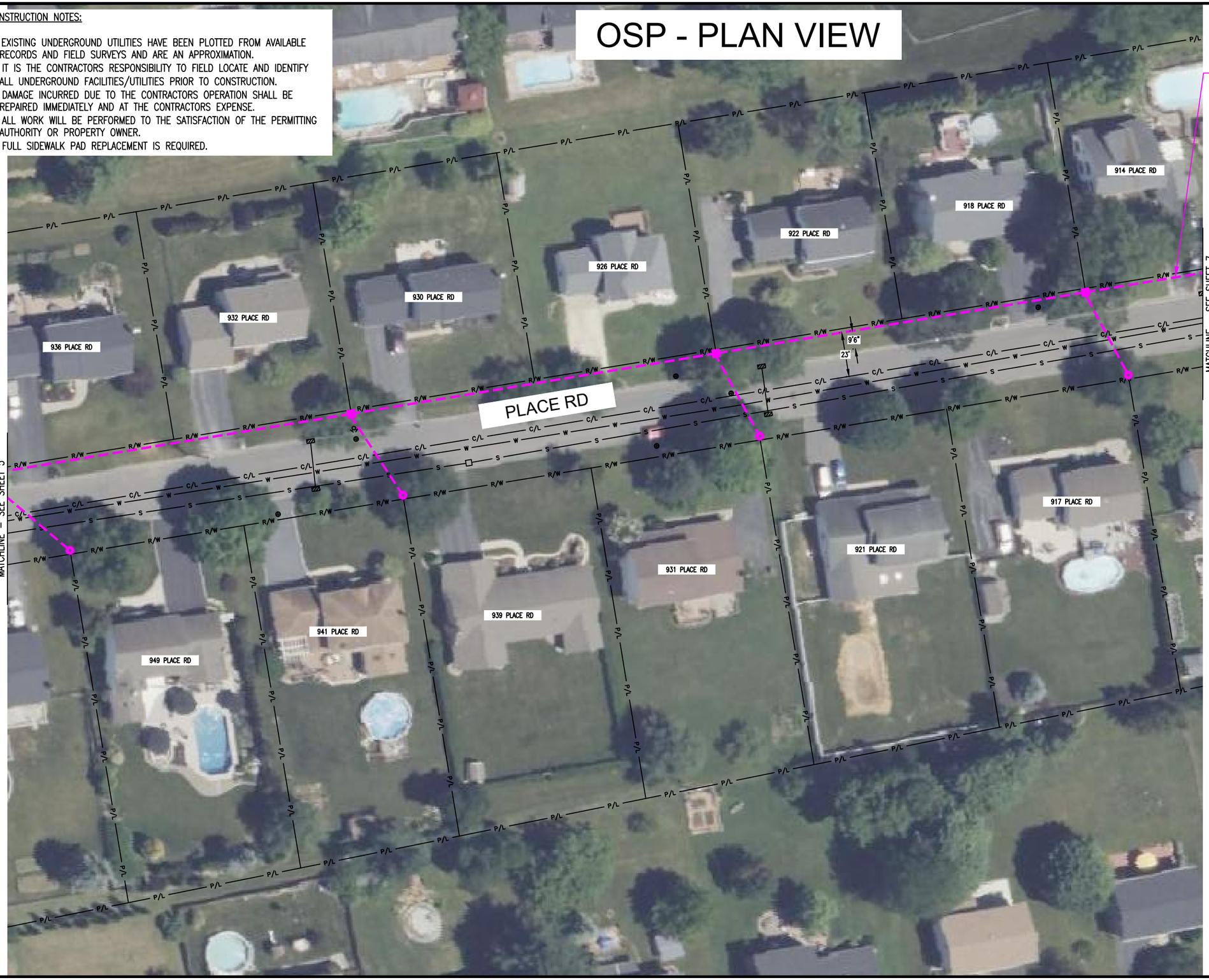

Know what's below. Call before you dig.

0 10' 20' 30' 40' 50'
SCALE: 1"=50'

empire ACCESS

TITLE: PERMIT - HANOVER TOWNSHIP - NORTHAMPTON COUNTY
WORK ORDER: HRTP_251067 - 2025 HANOVER TOWNSHIP UNDERGROUND BUILD OSP

BY: SPI COMMUNICATIONS

NO.	DATE	DESIGN	DRAFT	COMMENT
3				AS-BUILT
2	08/28/26	SP	MC	REVISION # 2
1	08/04/26	SP	LS	ORIGINAL

PROJECT NUMBER: EA0033
DRAWING NAME: EA_Place_Rd.dwg

CONFIDENTIAL/PROPRIETARY

SHEET: 6 OF 7

OSP - PLAN VIEW

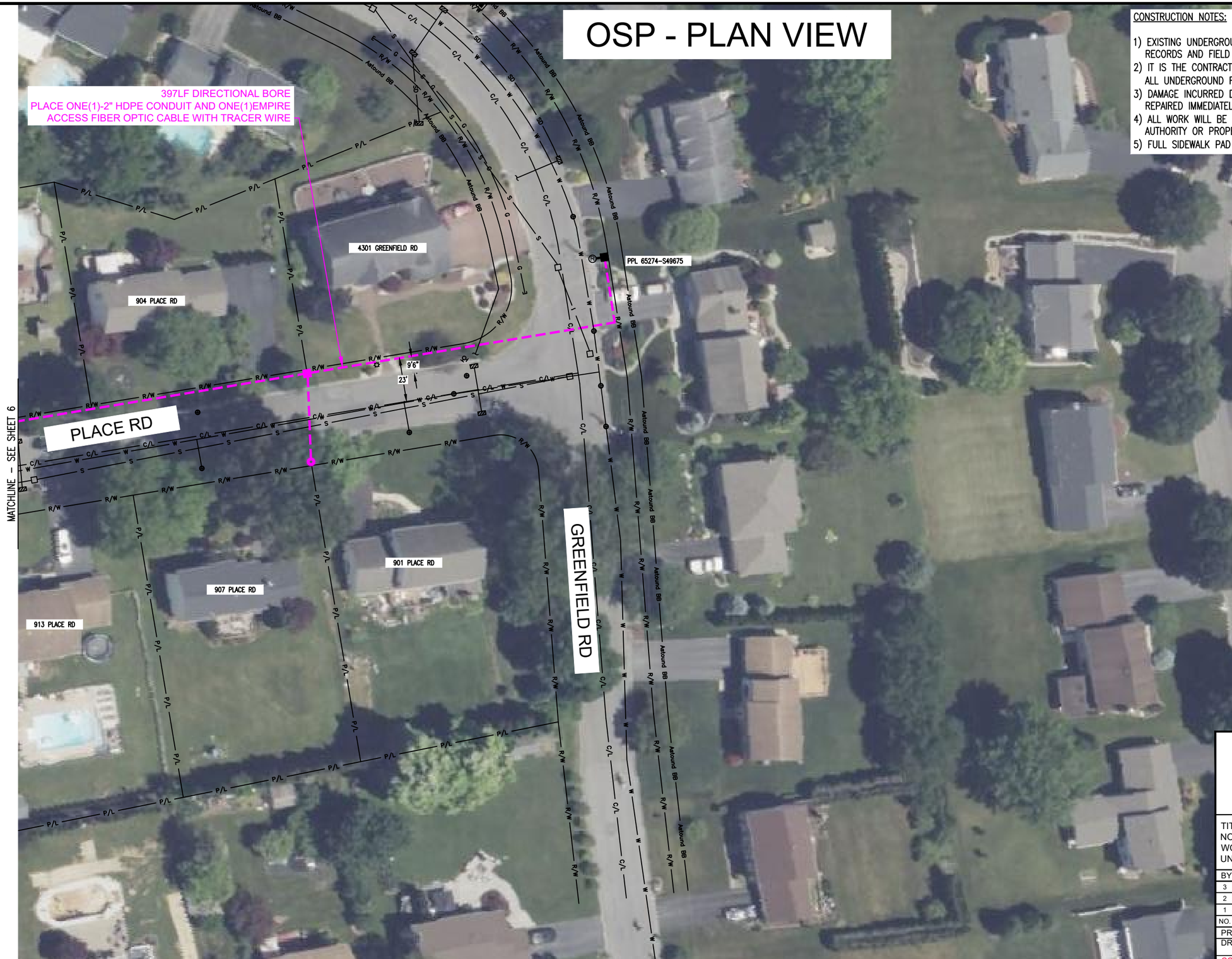

CONSTRUCTION NOTES:

1) EXISTING UNDERGROUND UTILITIES HAVE BEEN PLOTTED FROM AVAILABLE RECORDS AND FIELD SURVEYS AND ARE AN APPROXIMATION.
2) IT IS THE CONTRACTORS RESPONSIBILITY TO FIELD LOCATE AND IDENTIFY ALL UNDERGROUND FACILITIES/UTILITIES PRIOR TO CONSTRUCTION.
3) DAMAGE INCURRED DUE TO THE CONTRACTORS OPERATION SHALL BE REPAIRED IMMEDIATELY AND AT THE CONTRACTORS EXPENSE.
4) ALL WORK WILL BE PERFORMED TO THE SATISFACTION OF THE PERMITTING AUTHORITY OR PROPERTY OWNER.
5) FULL SIDEWALK PAD REPLACEMENT IS REQUIRED.

811 Know what's below. Call before you dig.

0 10' 20' 30' 40' 50'
SCALE: 1"=50'

empire ACCESS

TITLE: PERMIT - HANOVER TOWNSHIP - NORTHAMPTON COUNTY
WORK ORDER: HRTP_251067 - 2025 HANOVER TOWNSHIP UNDERGROUND BUILD OSP

BY: SPI COMMUNICATIONS

NO.	DATE	DESIGN	DRAFT	COMMENT
3				AS-BUILT
2	08/28/26	SP	MC	REVISION # 2
1	08/04/26	SP	LS	ORIGINAL

PROJECT NUMBER: EA0033
DRAWING NAME: EA_Place_Rd.dwg

CONFIDENTIAL/PROPRIETARY